UMBRA RIMORCHI
Via C. Pizzoni 37/39, 06132 Perugia - Italy
Tel. +39 075 5280260
Fax +39 075 5287033
www.umbrarimorchi.it
umbrarimorchi@umbrarimorchi.it

ISTRUZIONI DI MONTAGGIO

FITTING INSTRUCTIONS
INSTRUCTIONS DE MONTAGE
MONTAGEANLEITUNG
INSTRUCCIONES DE MONTAJE
ИНСТРУКЦИЯ ПО УСТАНОВКЕ

DISPOSITIVO DI TRAINO TIPO TOWING DISPOSAL TYPE TYPE DU DISPOSITIF DE REMORQUAGE ANHÄNGERVORRICHTUNG TYP DISPOSITIVO DE CAREO TIPO ТЯГОВО-СЦЕПНОЕ УСТРОЙСТВО	**13150**
PER AUTOVEICOLI FOR CARS POUR VÉHICULES AUTOMOBILES FÜR KRAFTAHRZEUGE PARA AUTOVEHICULO ДЛЯ АВТОМОБИЛЕЙ	**FIAT BRAVO** **LANCIA DELTA** 2007 => 2008 => (198, 844)
CLASSE E TIPO DI ATTACCO CLASS AND HITCH TYPE CLASSE ET TYPE DE CROCHET KLASSE UND BEFESTIGUNGSART CLASES DE ACOPLAMIENTO КЛАСС И ТИП СОЕДИНЕНИЯ	F
OMOLOGAZIONE HOMOLOGATION HOMOLOGATION ZULASSUNG APROBACION ОМОЛОГАЦИЯ	e3 00 – 7377 (DIR. 94/20/CE)
CARICO VERTICALE MAX S VALUE MASSE VERTICALE MAXIMUM ZUL. STUETZLAST CARGA MAX. VERTICAL МАКСИМАЛЬНАЯ ВЕРИКАЛЬНАЯ НАГРУЗКА	S = kg 85
VALORE D D VALUE VALEUR D D WERT VALOR D ЗНАЧЕНИЕ	$D = \frac{\text{Max Kg} \times \text{Max Kg}}{\text{Max Kg} + \text{Max Kg}} \times 0{,}00981 \leqslant 8{,}3\ \text{kN}$
COPPIA DI SERRAGGIO PER VITI (8.8): TORQUE SETTINGS FOR NUTS AND BOLTS (8.8): COUPLE DE SERRAGE POUR VIS (8.8): SCHRAUBENANZUGSMOMENT (8.8): MOM. DE PRESION PARA TORNILLOS Y TUERCAS (8.8): СПИСОК ДЕТАЛЕЙ (8.8):	M6 = 10 Nm M8 = 25 Nm M10 = 55 Nm M12 = 85 Nm M14 = 135 Nm M16 = 200 Nm

SAFETY INSTRUCTIONS

- Make sure that the tow bar is suitable for the vehicle before starting the installation. Verify that the vehicle's towing disposal quoted on the car registration at the points D.1/ D.2 is mentioned on the tow bar document. Otherwise ask the proper office for explanation or updated documents.
- For safety, all work involving tow bar installation must be undertaken by skilled technicians.
- Damaged components must be replaced with manufacturer’s spares parts by qualified staff.
- It is forbidden to make any modification or structural repair to the tow bar.

USE AND MAINTENANCE

- The tow ball must be kept clean and lubricated. For added safety, his diameter (50 mm) must be checked at regular intervals. If the tow ball measures less than 49 mm after selected readings across the diameter, the tow ball must be replaced with a new one.
- After 1000 km of towing, check torque settings for nuts and bolts, in accordance with the table.

CAUTION

The tow bar installer must fix at the same level with the ball in a clear position, a plate with the ball's maximum load for the vehicle on which the tow bar is fitted.

FITTING INSTRUCTIONS

13150

Remove below the vehicle any mastic from contact points between the chassis and the tow bar; then paint mastic free pieces with rust inhibitor.

1. Remove the bumper and eliminate the inner reinforcement bar;
2. Unloose the screw of the exhaust-pipe bearing to allow the passage of the left tie rod inside the chassis-rail;
3. Remove and eliminate the square rubber tops under the chassis-rails to free the holes and then insert the two rectangular thickness "*C*" inside;
4. Insert the left and right tie rods "*A*" inside the chassis-rails referring to the holes "*1*", "*2*", and "*3*", insert the screws and fix interposing the large washers in position "*1*";
5. Interpose the cross bar "*B*" to the already fitted tie rods "*A*" referring to the holes "*4*" and "*5*"; insert the screws and fix;
6. Tighten all bolts and nuts as shown in the enclosed layout;
7. Connect the wiring to the socket, following the car booklet's instructions "*use and maintenance*" as shown in the enclosed wiring kit layout;
8. According to the type of the vehicle where you are installing the tow bar, make a cut on the lower and central part of the bumper as shown in the enclosed layout;
9. Fold up inside or cut the bracket for the bumper fixing to allow the free rotation of the socket holder as shown in the layout of the attachment "Bumper Cut Layout";
10. **JUST FOR LANCIA DELTA**: Unhook the central shock absorber pad from the reinforcement bar. Cut and eliminate the two cylindrical bearings on the pad and using the double sided tape (or silicone), put the shock absorbers pad to the central part of the cross bar.
11. Tighten the screw of the exhaust-pipe bearing and back together the rear bumper.

INVISIBLE AND SWIVELING SOCKETHOLDER

13150

1	2x	M12x35	CONTACT 12x27x2	12x42x2,5		
2	4x	M10x25	CONTACT 10x22x1,5	M10	FIAT BRAVO	
2	4x	M8 ORIGINAL			LANCIA DELTA	
3	2x	M8 ORIGINAL				
4	2x	M10x30	CONTACT 10x22x1,5	M10		
5	2x	M10x30	CONTACT 10x22x1,5			
6	.	M12				

13150/F

1	2x	M12x85 (8.8)
2	2x	12.2x27x2.5
3	2x	M12 (8.8)
4	2x	SPESSORI SPACERS

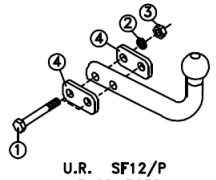

U.R. SF12/P
e3 00-7672

(F57A)

13150/C

1	2x	M12x25 (8.8)
2	3x	12.2x27x2.5
3	1x	M12x85 (8.8)
4	1x	M12 (8.8)

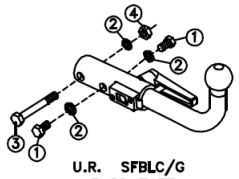

U.R. SFBLC/G
e3 00-7137

(57 AY)

13150/VM

1	2x	M12x30 (8.8)
2	2x	M12x25 (8.8)
3	4x	12.2x27x2.5

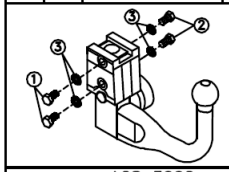

ACS 3002
e4 00-2164
e4 00-2608
e4 00-2932

ACS 6002
e4 00-3953

TERWA 30508
e4 00-3919

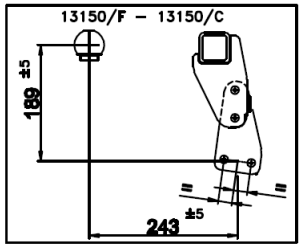

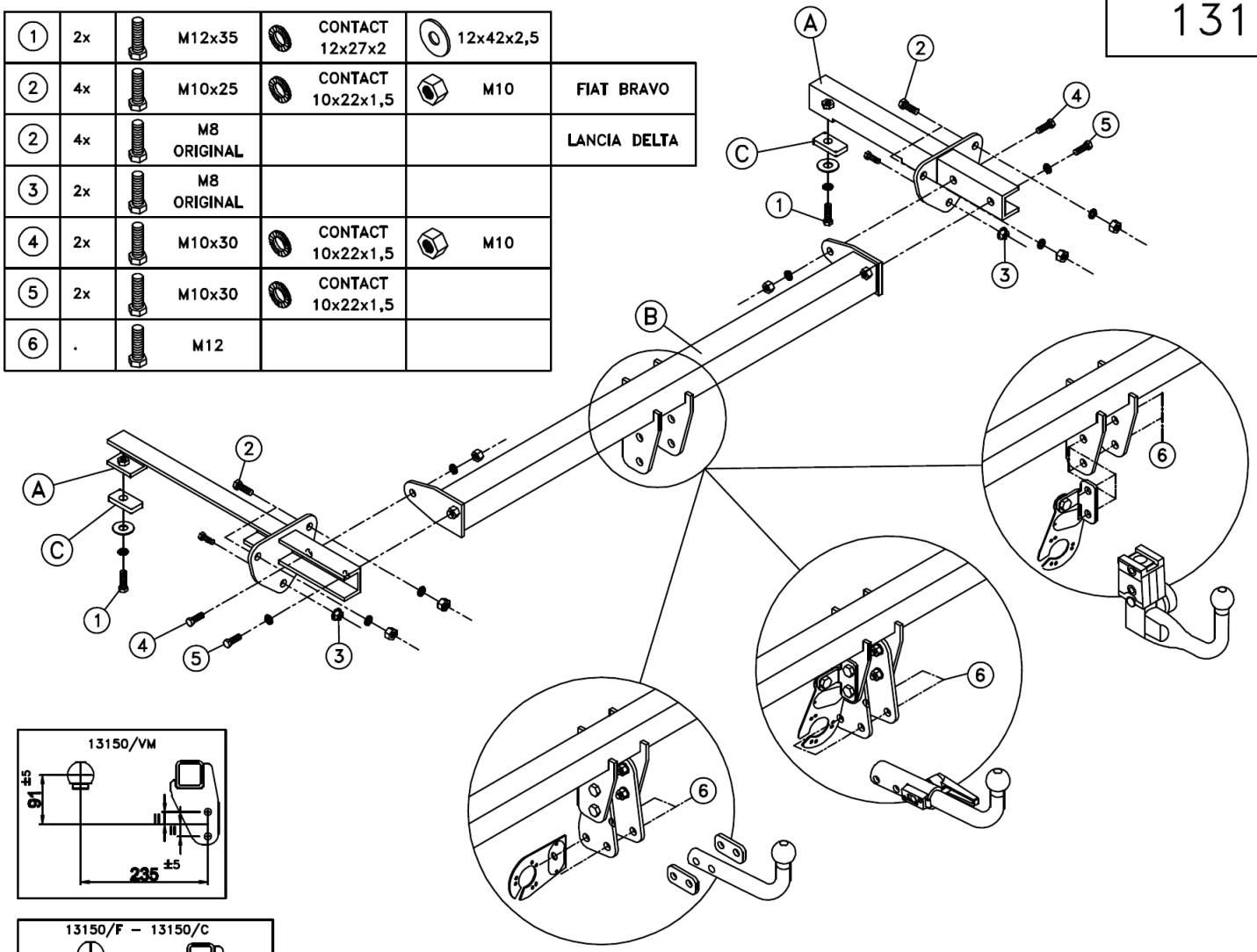

REV.02

P. 4 / 9

UMBRA RIMORCHI

01/01/11

v. 1.0

13150
- FIAT BRAVO
LANCIA DELTA -

TAGLIO PARAURTI
BUMPER'S CUT
DÉCOUPE PARE-CHOCS
AUSSCHNITT STOßSTANGE
РАЗРЕЗ БАМПЕРА
РОЗРІЗ БАМПЕРУ
FIAT BRAVO

Vista da sotto
Bottom view
Vue au-dessous
Unteransicht
Вид снизу
Вигляд знизу

Mezzeria autoveicolo
Centre line
Ligne Médiane
Mittellinie des Fahrzeugs
Средина транспортного средства
Середина транспортного засобу

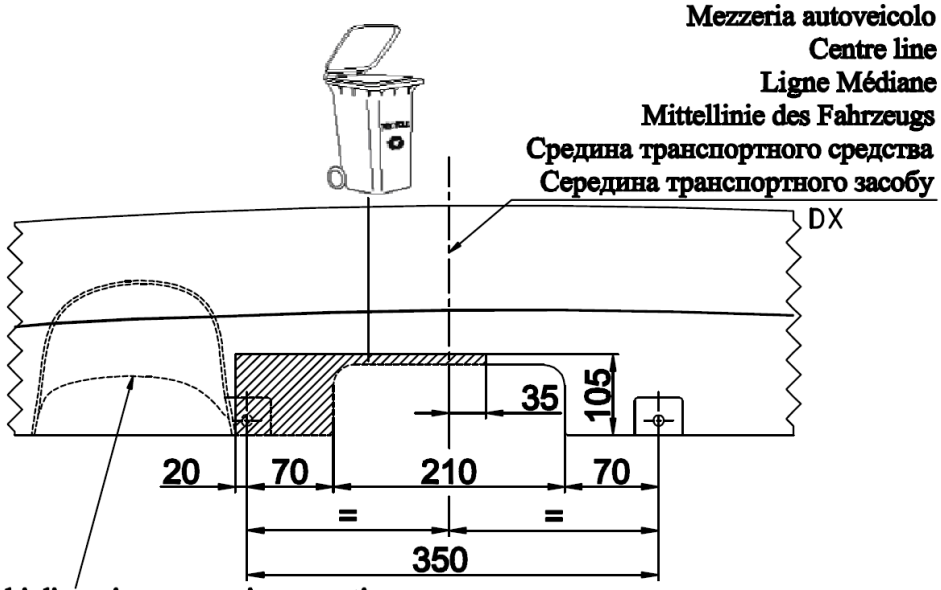

Alloggiamento tubi di scarico per versione sportiva
Exhaust pipes housing for sport version
Logement des tuyaux d'échappement pour version sportif
Gehàuse der auspuffrohren für sport version
Место для выхлопной трубы для спортивной версии
Місце для вихлопної труби для спортивної версії

13150/C
13150/VM

Vista da sotto
Bottom view
Vue au-dessous
Unteransicht
Вид снизу
Вигляд знизу

Mezzeria autoveicolo
Centre line
Ligne Médiane
Mittellinie des Fahrzeugs
Средина транспортного средства
Середина транспортного засобу

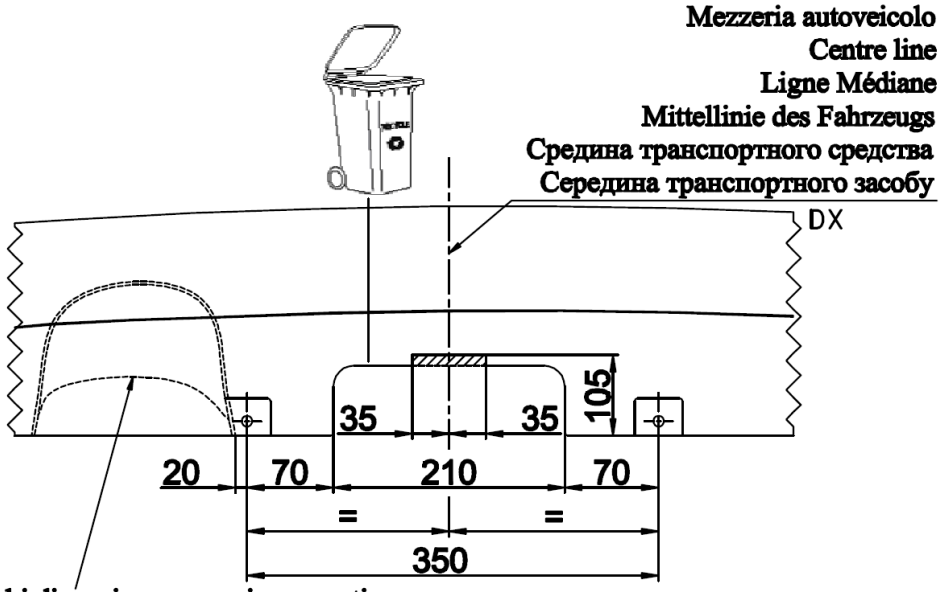

Alloggiamento tubi di scarico per versione sportiva
Exhaust pipes housing for sport version
Logement des tuyaux d'échappement pour version sportif
Gehàuse der auspuffrohren für sport version
Место для выхлопной трубы для спортивной версии
Місце для вихлопної труби для спортивної версії

13150/F

TAGLIO PARAURTI
BUMPER'S CUT
DÉCOUPE PARE-CHOCS
AUSSCHNITT STOßSTANGE
РАЗРЕЗ БАМПЕРА
РОЗРІЗ БАМПЕРУ
LANCIA DELTA

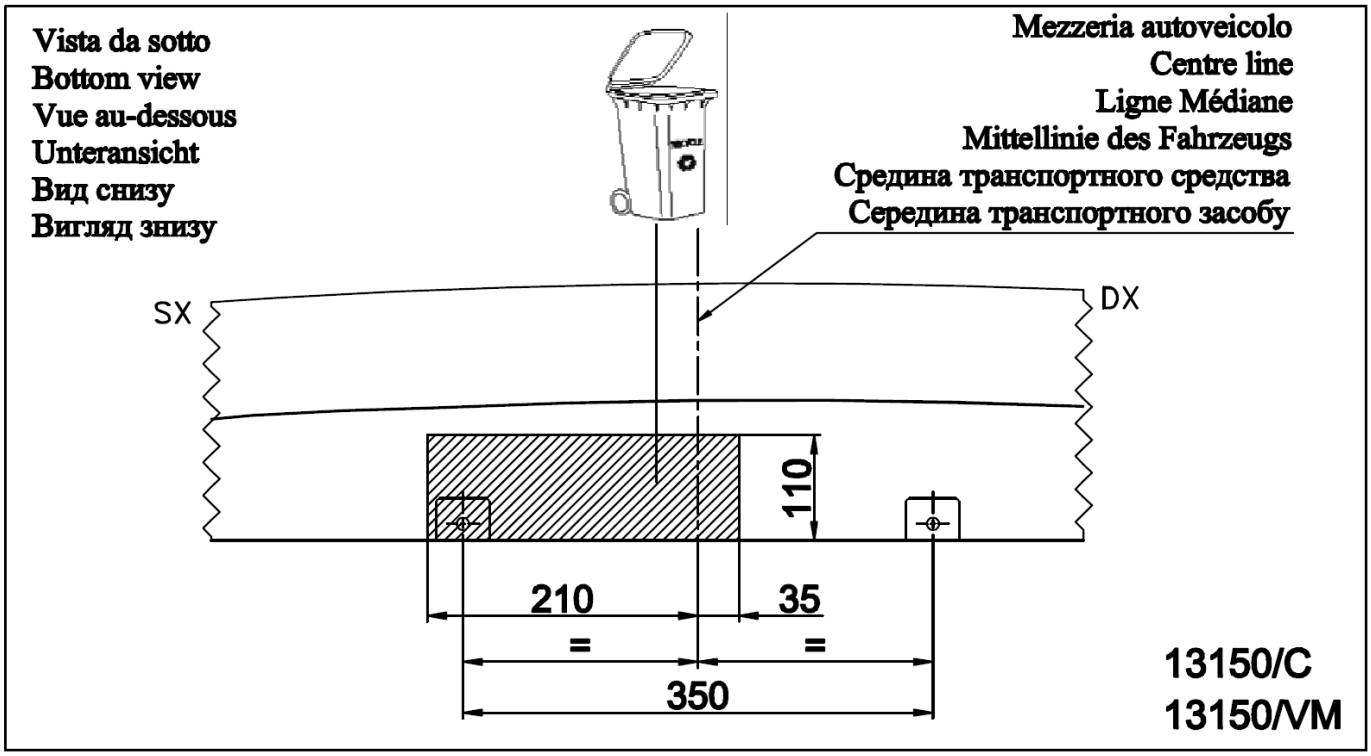

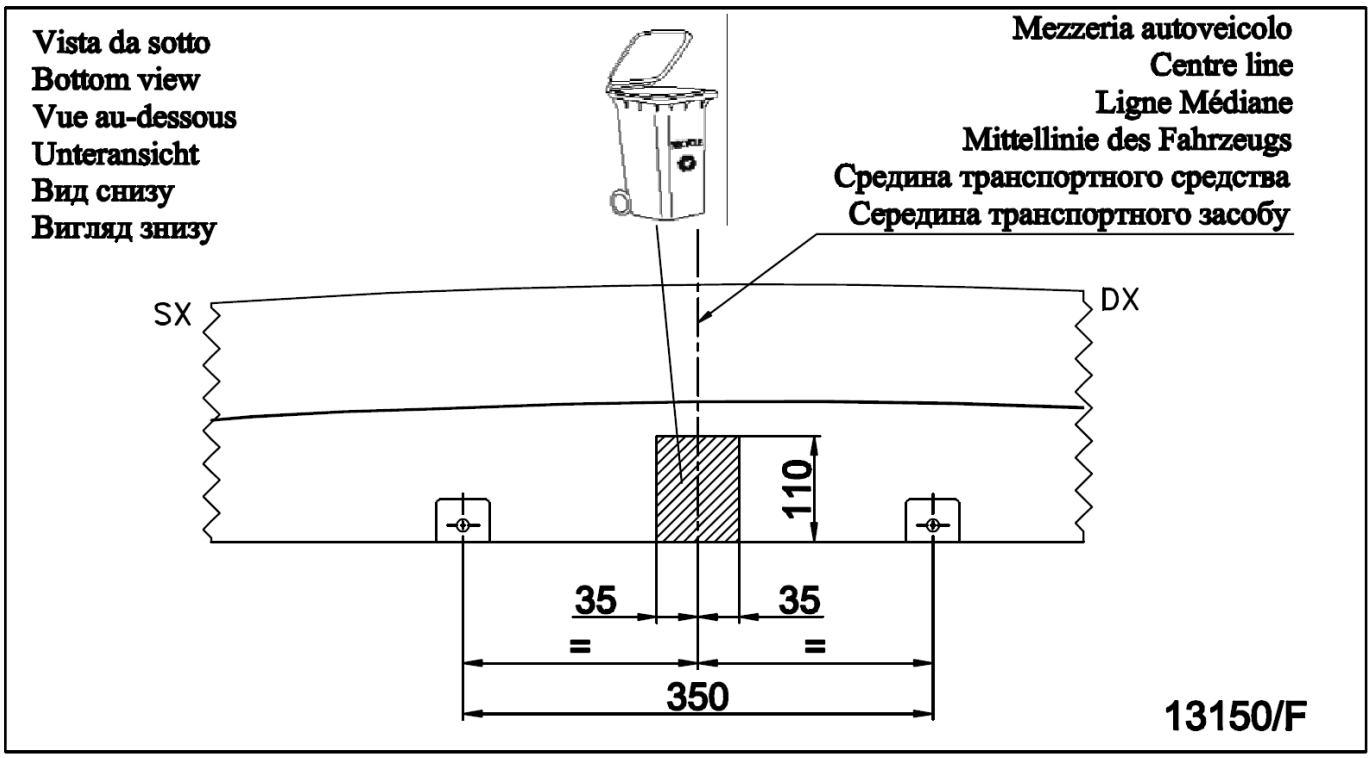

RIPIEGA STAFFA FISSAGGIO PARAURTI
BUMPER FIXING BRACKET TO BE REFOLDED INWARDS
ÉTRIER DE FIXATION DU PARE-CHOCS À PLIER VERS L'INTÉRIEUR
BÜGEL FÜR DIE STOßSTANGEBEFESTIGUNG WIEDER ZU EINWÀRTS ZUSAMMENFALTEN
ВЫГНУТЬ ВКЛАДКУ КРЕПЛЕНИЯ БАМПЕРА
ВИГНУТИ ВКЛАДКУ КРІПЛЕННЯ БАМПЕРУ

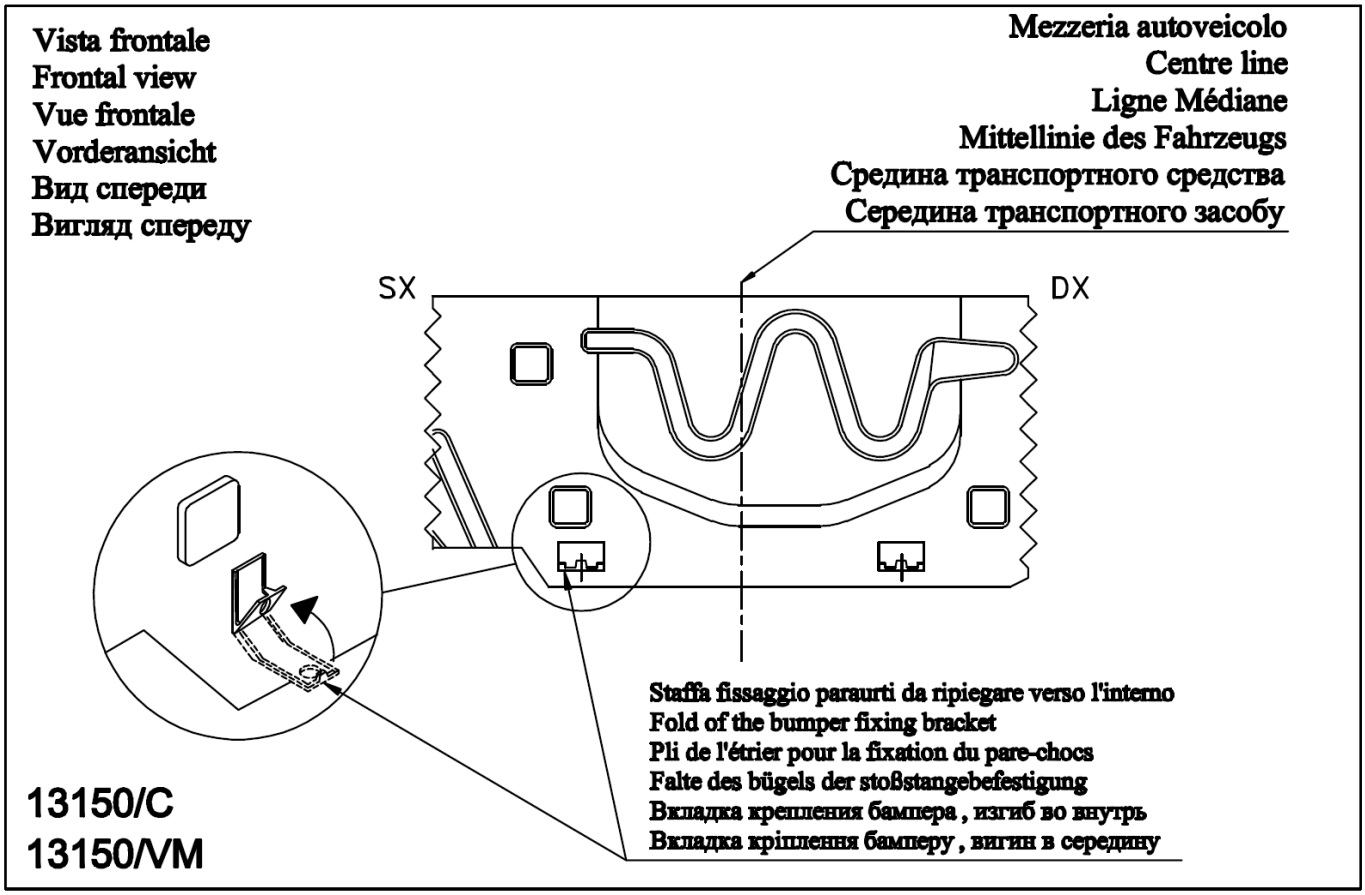

MECCANISMO MOD. C 2007

UMBRA RIMORCHI
tel. +39 075 5280260
fax +39 075 5287033
www.umbrarimorchi.it
umbrarimorchi@umbrarimorchi.it

NL - Montage	**S** - Montering	**I** - Montaggio
GB - Mounting	**DK** - Tilkobling	
D - Montage	**FIN** - Asennus	
F - Montage	**E** - Montaje	

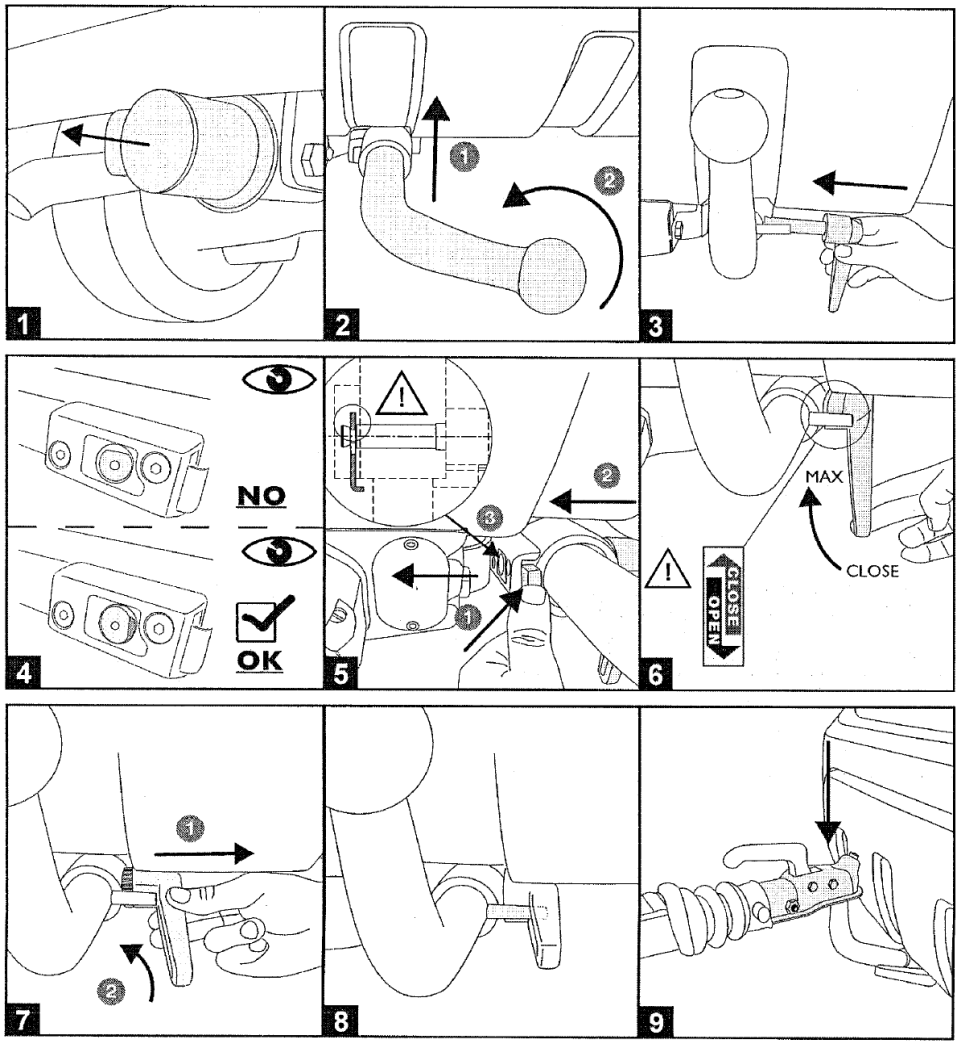

NL - Demontage	**S** - Demontering	**I** - Smontaggio
GB - Disounting	**DK** - Frakobling	
D - Demontage	**FIN** - Irrotta	
F - Démontage	**E** - Desmontaje	

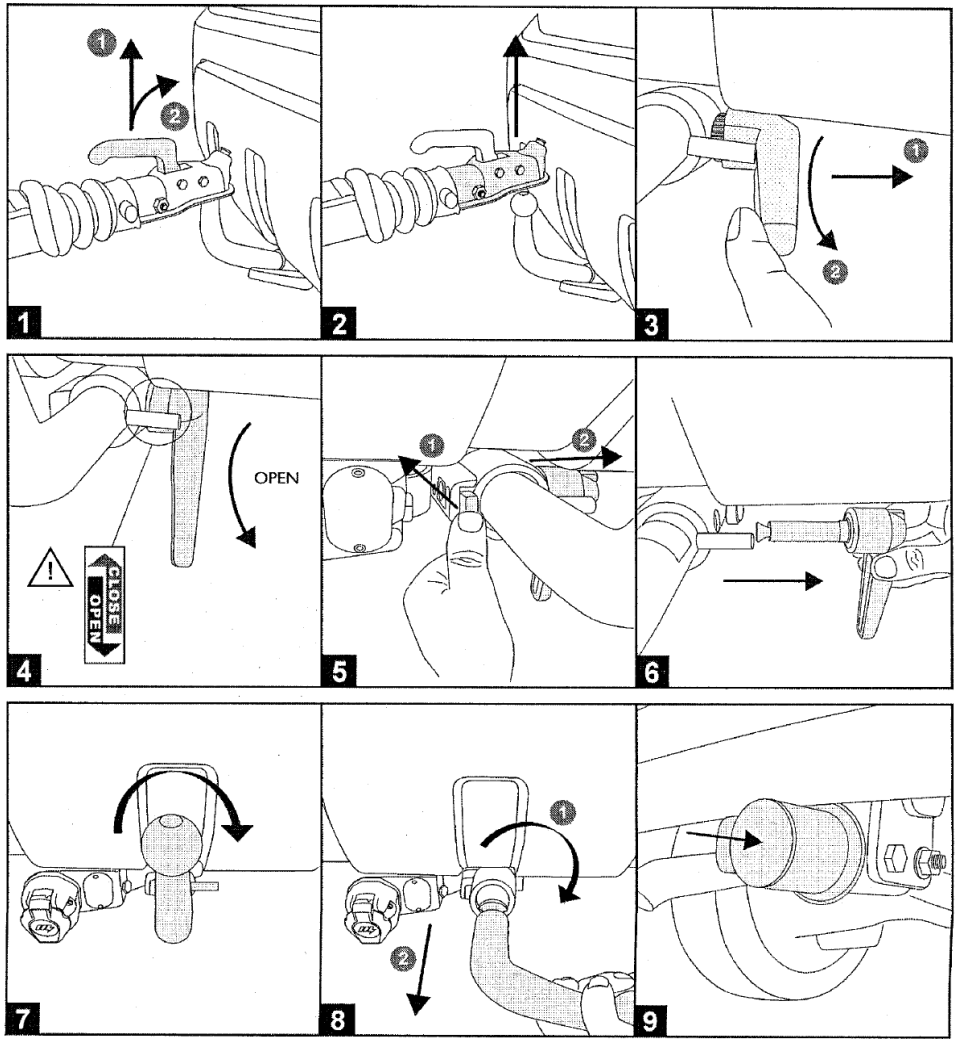

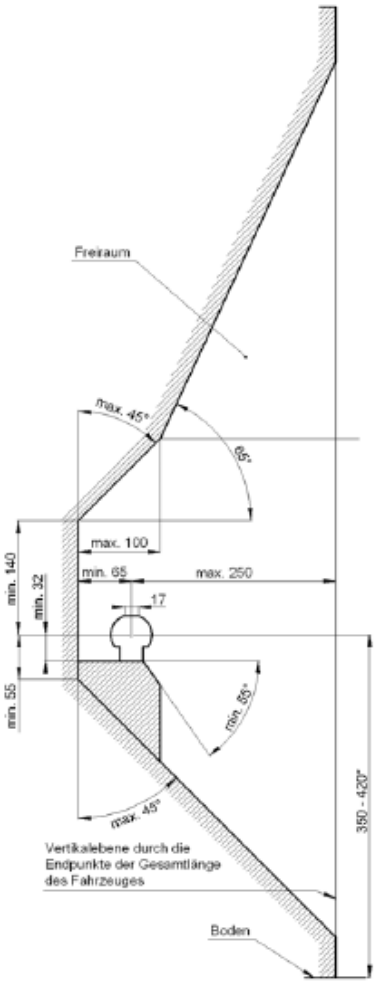

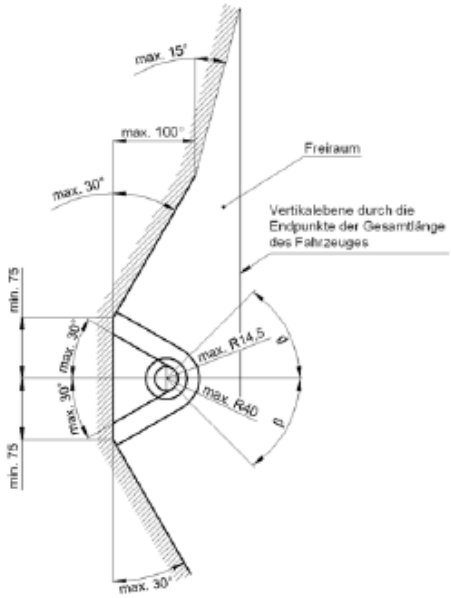

D Der Freiraum nach Anhang 7, Abbildung 25a und 25b der Richtlinie ECE-R 55 ist zu gewährleisten.

CZ Volný prostor ve smyslu Přílohy VII, obr. 25a a 25b směrnice ECE-R 55 musí být zaručen.

DK Det skal sikres, at der er spillerum i overensstemmelse med bilag 7, fig. 25a og 25b i henhold til direktiv ECE-R 55.

E Hay que garantizar el espacio libre conforme al anexo 7, fig. 25a y 25b de la directiva ECE-R 55.

F La zone de dégagement, selon l'annexe 7, figure 25a et 25b de la directive ECE-R 55, doit être assurée.

FIN Välyksen tulee täyttää ohjeen ECE-R 55 liitteen 7 kuvissa 25a ja 25b ilmoitetut vaatimukset.

GB Make sure to provide clearance according to appendix 7, figures 25a and 25b of the ECE-R 55 regulations.

GR Πρέπει να εξασφαλίζεται ο ελεύθερος χώρος σύμφωνα με το παράρτημα 7, σχήμα 25a και 25b της κοινοτικής οδηγίας ECE-R 55.

HU Biztosítani kell az ECE-R 55 irányelv szerinti, 7. számú függelék, 25a. és 25b ábrákban jelölt szabad teret.

I Deve essere garantito lo spazio libero secondo l'allegato VII, figure 25a e 25b della normativa europea ECE 55 R-01.

N Det må sørges for fritt rom i samsvar med tillegg 7, figur 25a og 25b i direktiv ECE-R 55.

NL De vrije ruimte volgens supplement 7, afbeelding 25a en 25b van richtlijn ECE-R 55 moet gewaarborgd zijn.

PL Należy zapewnić wolną przestrzeń zgodnie z załącznikiem 7, rys. 25a i 25b, dyrektywy ECE-R 55.

RUS Оставлять свободное пространство согласно Приложению 7, рис. 25a и 25b Директивы ECE-R 55.

S Spelrummet enligt bilaga 7, bild 25a och 25b i riktlinje ECE-R 55, måste garanteras.

D * bei zulässigem Gesamtgewicht des Fahrzeuges

CZ * při celkové přípustné hmotnosti vozidla

DK * ved tilladt totalvægt for køretøjet

E * con peso total autorizado del vehículo

F * pour poids total en charge autorisé du véhicule

FIN * Ajoneuvon suurimmalla sallitulla kokonaispainolla

GB * at gross vehicle weight rating

GR * για το επιτρεπτό μικτό βάρος του οχήματος

HU * A jármű megengedett összsúlya esetén

I * per il peso complessivo ammesso del veicolo

N * ved kjøretøyets tillatte totalvekt

NL * bij toegestaan totaal gewicht van het voertuig

PL * przy dopuszczalnym ciężarze całkowitym pojazdu

RUS * при допустимом общем весе автомобиля

S * vid fordonets tillåtna totalvikt